ORION

HIGH CAPACITY FORK LIFT TRUCKS

Orion K120 Specifications: 120,000 lbs @ 24” LC

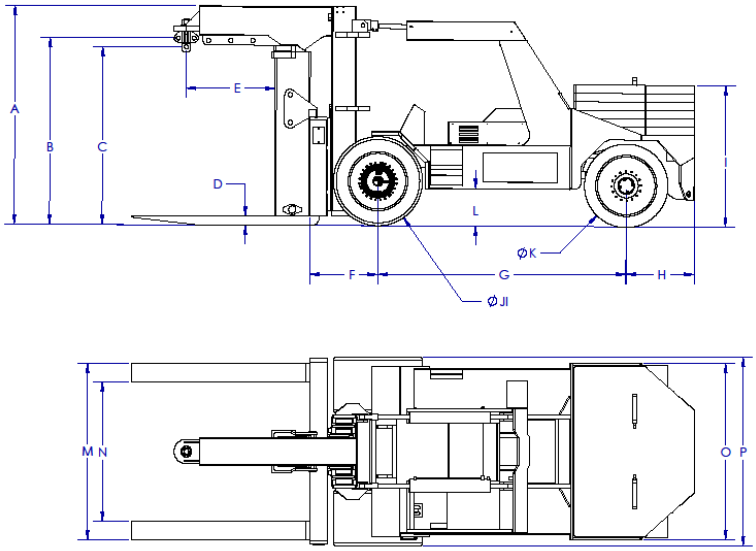

A. A Lowered height 118” 2997.2mm
B. Upper rotator hole height 100.5” 2552.7mm
C. NA
D. Standard fork thickness 5” 127mm
E. Stinger reach 48”>144” 1219mm>3657mm Manual Stinger reach 96”>144” 2438mm>3657mm
F. Center of wheel to fork face 36.5” 927mm
G. Wheelbase 134” 3403mm
H. Center of wheel to back of frame 36.75” 933.5mm
I. Height to top of counterweights 76.25” 1936.75mm
J. Drive tire 48” x 30” 1219mm x 762mm
K. Steer tire 45” x 12” 1143mm x 305mm
L. Side panel ground clearance 20” 508mm
M. Fork spread 95” 2413mm
N. Inner fork spread 75” 1905mm
O. Frame width 95” 2413mm
P. Overall width 102” 2590.8mm

Dimensions may change without notice

45 Shepherd Rd. Oakville, Ontario, Canada L6K 2G6 T: (905) 844 4164
F: (905) 844 2135
www.orionlifts.com

S&RA MEMBER Specialized Carriers & Rigging Association